

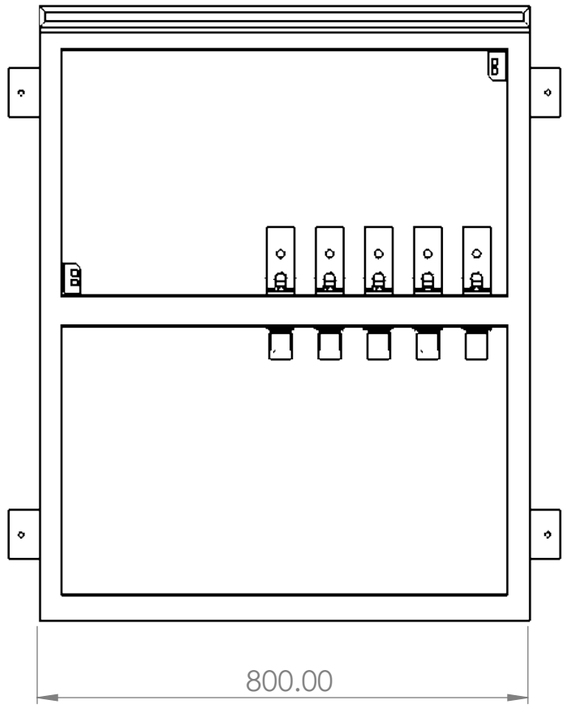

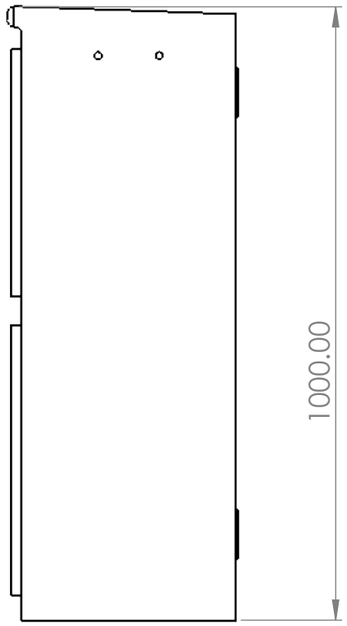

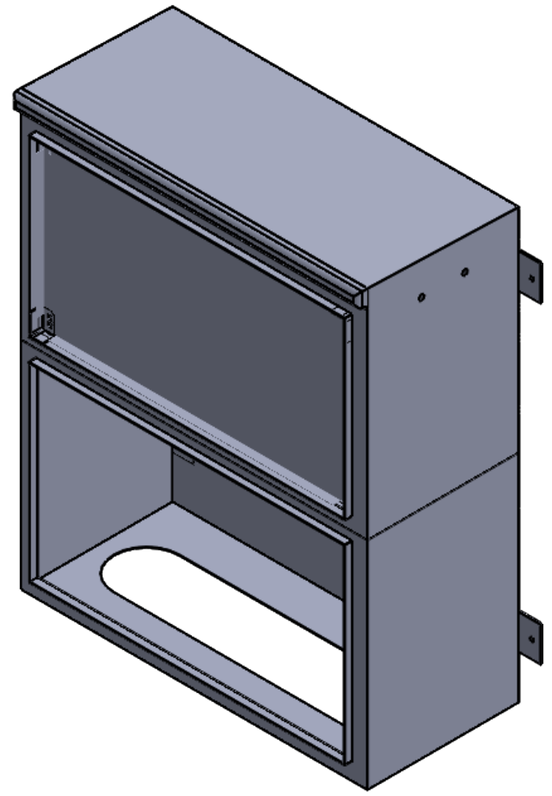

630A Secure/Lockable Generator Connection Point

REV	CREATED	APP	DATE	DETAILS
01	LS			1st Release

UNLESS OTHERWISE SPECIFIED:
DIMENSIONS ARE IN MILLIMETERS
SURFACE FINISH: Satin Black
TOLERANCES:
LINEAR: -
ANGULAR: -

QUANTITY:

DEBURR AND BREAK SHARP EDGES

REVISION: 01

	NAME	SIGNATURE	DATE
DRAWN	LS	L.Sutter	06/06/25
CHK'D			
APPV'D			
MFG			
Q.A			

MATERIAL/FINISH:

ESTIMATED WEIGHT: - g

IDE SYSTEMS LTD
UNIT 3, Swaffield Park
Hyssop Close, Cannock
WS11 7FU
TEL: 01543 574111
sales@idesystems.co.uk

DESCRIPTION: GCP630Se-1-LOCK-BE

A3

SCALE:1:10

SHEET 1 OF 1